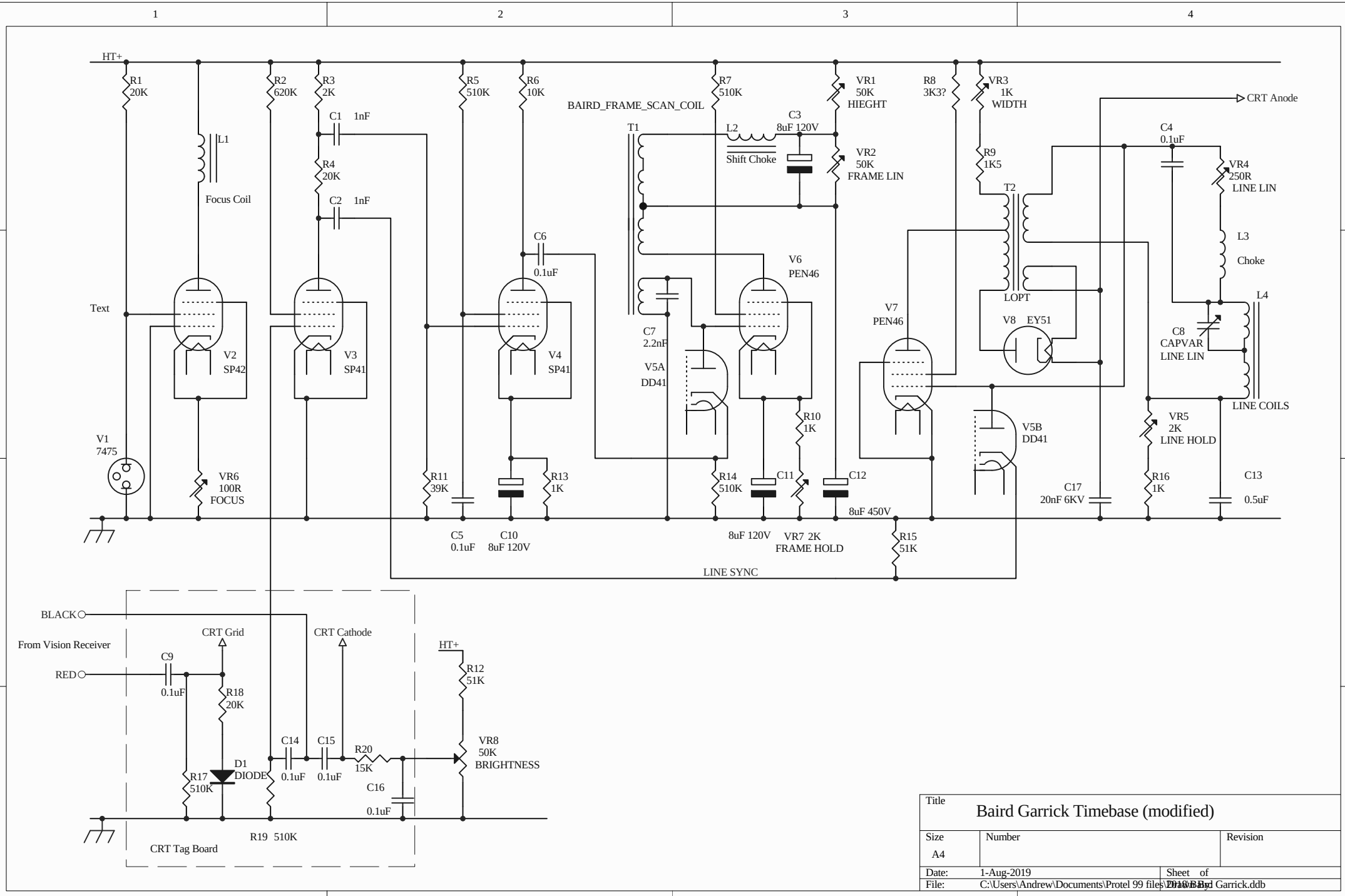
HT+
R1 20K
R2 620K
R3 2K
R4 20K
R5 510K
R6 10K
R7 510K
R8 3K3?
R9 1K5
R10 1K
R11 39K
R12 51K
R13 1K
R14 510K
R15 51K
R16 1K
R17 510K
R18 20K
R19 510K
R20 15K
C1 1nF
C2 1nF
C3 8uF 120V
C4 0.1uF
C5 0.1uF
C6 0.1uF
C7 2.2nF
C8 CAPVAR LINE LIN
C9 0.1uF
C10 8uF 120V
C11 8uF 120V
C12 8uF 450V
C13 0.5uF
C14 0.1uF
C15 0.1uF
C16 0.1uF
C17 20nF 6KV
L1 Focus Coil
L2 Shift Choke
L3 Choke
L4 LINE COILS
T1 BAIRD_FRAME_SCAN_COIL
T2 LOPT
VR1 50K HIEGHT
VR2 50K FRAME LIN
VR3 1K WIDTH
VR4 250R LINE LIN
VR5 2K LINE HOLD
VR6 100R FOCUS
VR7 2K FRAME HOLD
VR8 50K BRIGHTNESS
CRT Anode
Text
V1 7475
V2 SP42
V3 SP41
V4 SP41
V5A DD41
V5B DD41
V6 PEN46
V7 PEN46
V8 EY51
LINE SYNC
BLACK
From Vision Receiver
RED
CRT Grid
CRT Cathode
D1 DIODE
CRT Tag Board
Title
Baird Garrick Timebase (modified)
Size
A4
Number
Revision
Date: 1-Aug-2019
Sheet of
File: C:\Users\Andrew\Documents\Protel 99 files\2018\Baird Garrick.ddb
Drawn By: